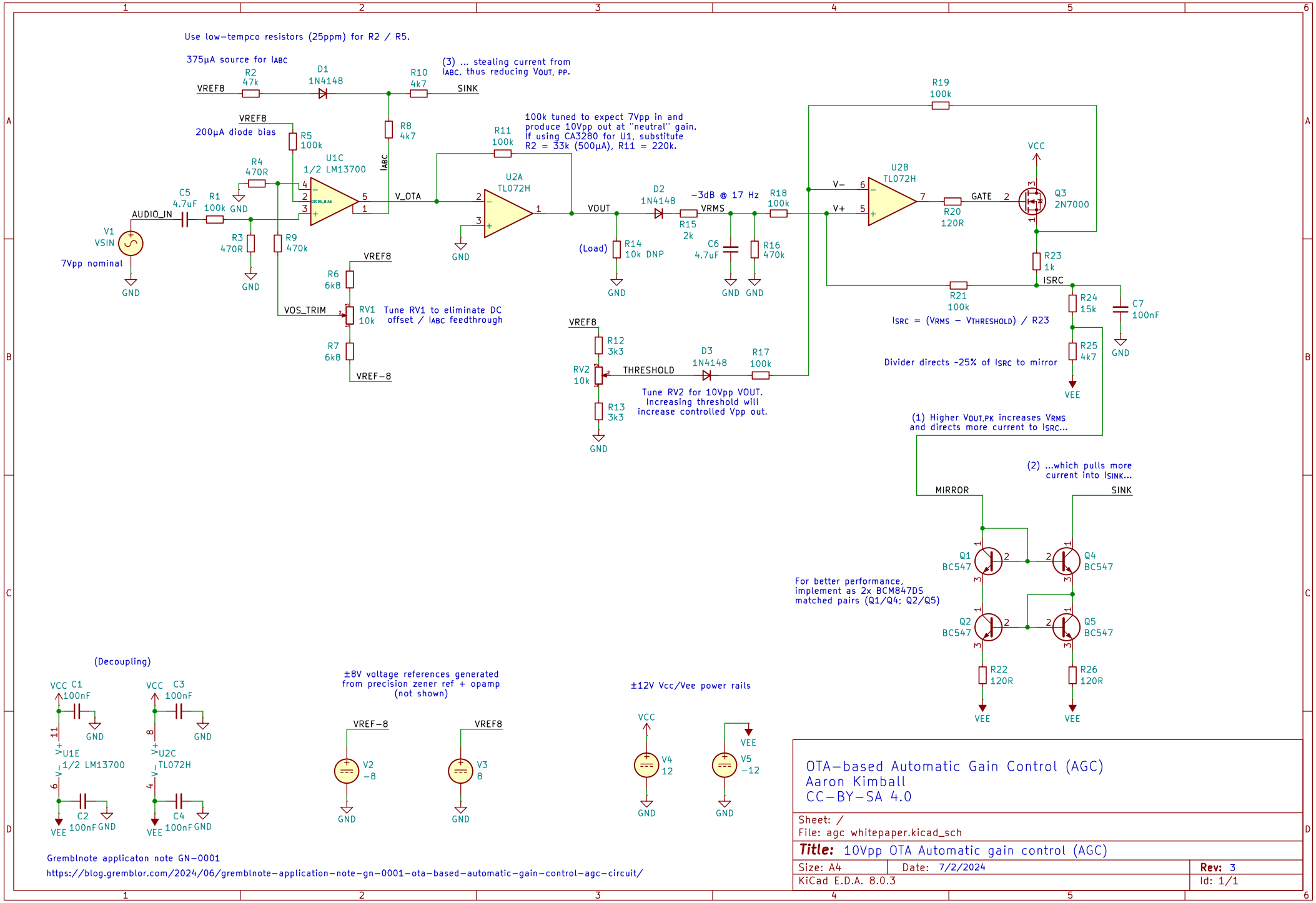

Gremblnote applicaton note GN-0001

https://blog.gremblor.com/2024/06/gremblnote-application-note-gn-0001-ota-based-automatic-gain-control-agc-circuit/

OTA-based Automatic Gain Control (AGC)
Aaron Kimball
CC-BY-SA 4.0

Sheet: /
File: agc whitepaper.kicad_sch

Title: 10Vpp OTA Automatic gain control (AGC)

Size: A4	Date: 7/2/2024	**Rev:** 3
KiCad E.D.A. 8.0.3		Id: 1/1